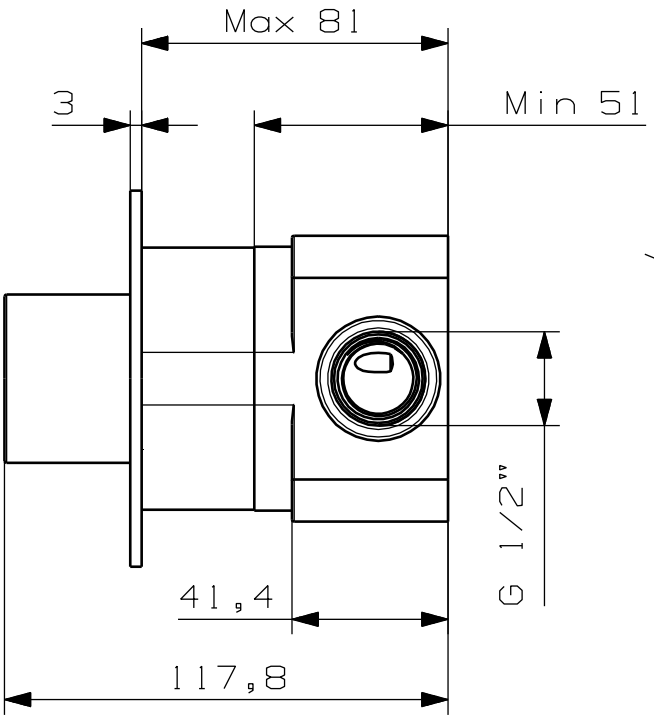

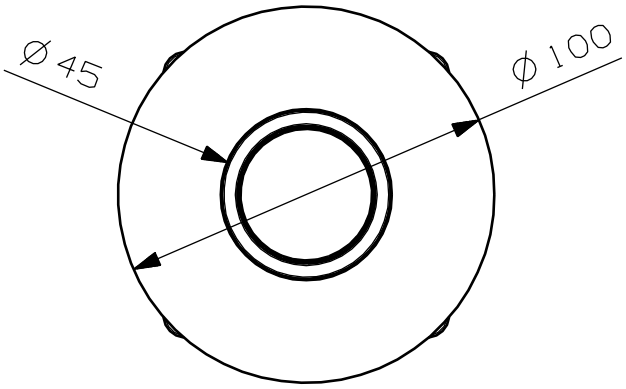

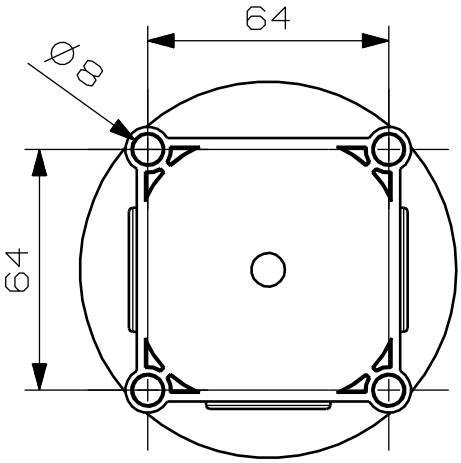

	DESIGNER	REVISION 1	REVISION 2	Scale: 1:1	DRW Size:	A4
DATE	03/05/23	07/03/23				
SIGN	SECCHI	SECCHI			Material:	....

NDW® NOBILI

Description: Incasso a Pulsante con Box e Rosone Tondo

Code N°: PM11034

Drawing N°: ND_2475_D1

This print and all of the data contained here on is the sole and exclusive property of NDW and will not be disclosed to others whitout the consent of NDW. This print must the returned to NDW if requested.